Front Control Dryers

Refer to Page 3 for Model Numbers

Parts

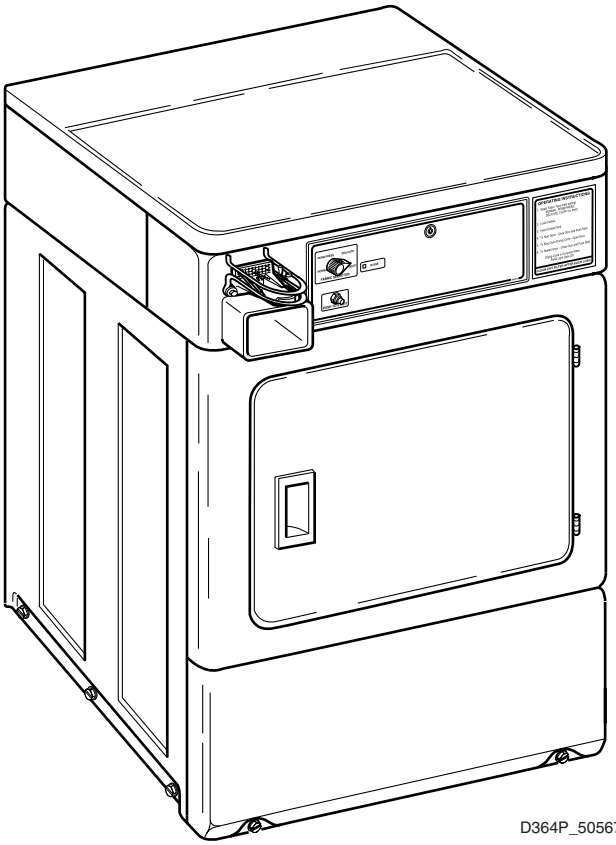

Alliance Laundry Systems

www.comlaundry.com

Part No. 505678R2
June 2005

Table of Contents

Title	Page
Parts Ordering Information	2
Nameplate Location	2
Model Identification	3
Control Panel and Controls	4
Control Panel and Controls - Coin Drop	6
Control Panel and Controls - Card Reader Installed	8
Control Cabinet	10
Control Cabinet - Coin Drop	12
Control Cabinet - Card Reader Installed	14
2 Switch Timer	16
Loading Door	18
Access Panel, Front Panel and Seal	20
Motor, Exhaust Fan and Belt	22
Front Bulkhead, Air Duct, Felt Seal and Cylinder	24
Rear Bulkhead, Felt Seal, Cylinder Roller and Terminal Block	26
Heater Duct and Element Assembly	28
Heater Duct Assembly	30
Gas Valve, Igniter and Gas Conversion Kits	32
Cabinet, Exhaust Duct and Base	34
Power Cord	36
Terminal Block and Terminals	38
Terminals	40
Motor Connection Block, Terminal Extractor Tools	42
Wire Harnesses and Wires	44
Parts Index	45

© Copyright 2005, Alliance Laundry Systems LLC

All rights reserved. No part of the contents of this book may be reproduced or transmitted in any form or by any means without the expressed written consent of the publisher.

Parts Ordering Information

If literature or replacement parts are required, contact the source from whom the machine was purchased or contact Alliance Laundry Systems at (920) 748-3950 for the name and address of the nearest authorized parts distributor.

For technical assistance, call (920) 748-3121.

Nameplate Location

When calling or writing about your product, be sure to mention model and serial numbers. Model and serial numbers are located on nameplate(s) as shown.

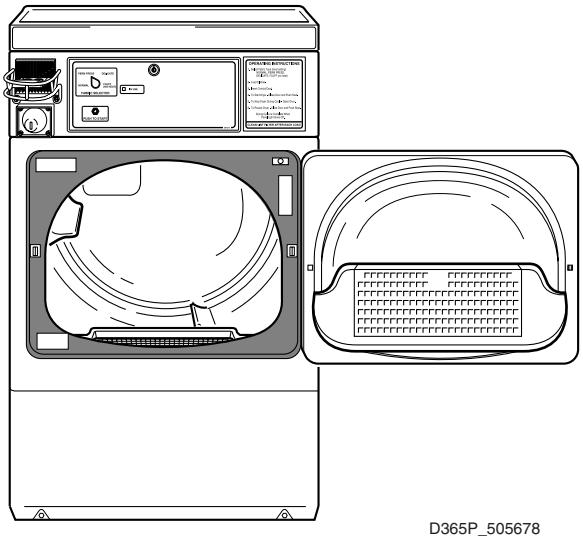

D365P_505678

© Copyright, Alliance Laundry Systems LLC – DO NOT COPY or TRANSMIT

Model Identification

Information in this manual is applicable to these dryer models:

HFE107*A1702	HFG109*A1102	SFE107*A	SFE707*A	SFG509*A
HFE107*C1702	HFG109*C1102	SFE507*A	SFG109*A	SFG709*A

*** Add Letter To Designate Color. L - Almond W - White**

© Copyright, Alliance Laundry Systems LLC – DO NOT COPY or TRANSMIT

Control Panel and Controls

Models HFE107*A1702, HFE107*C1702, HFG109*A1102, HFG109*C1102, SFE107*A and SFG109*A

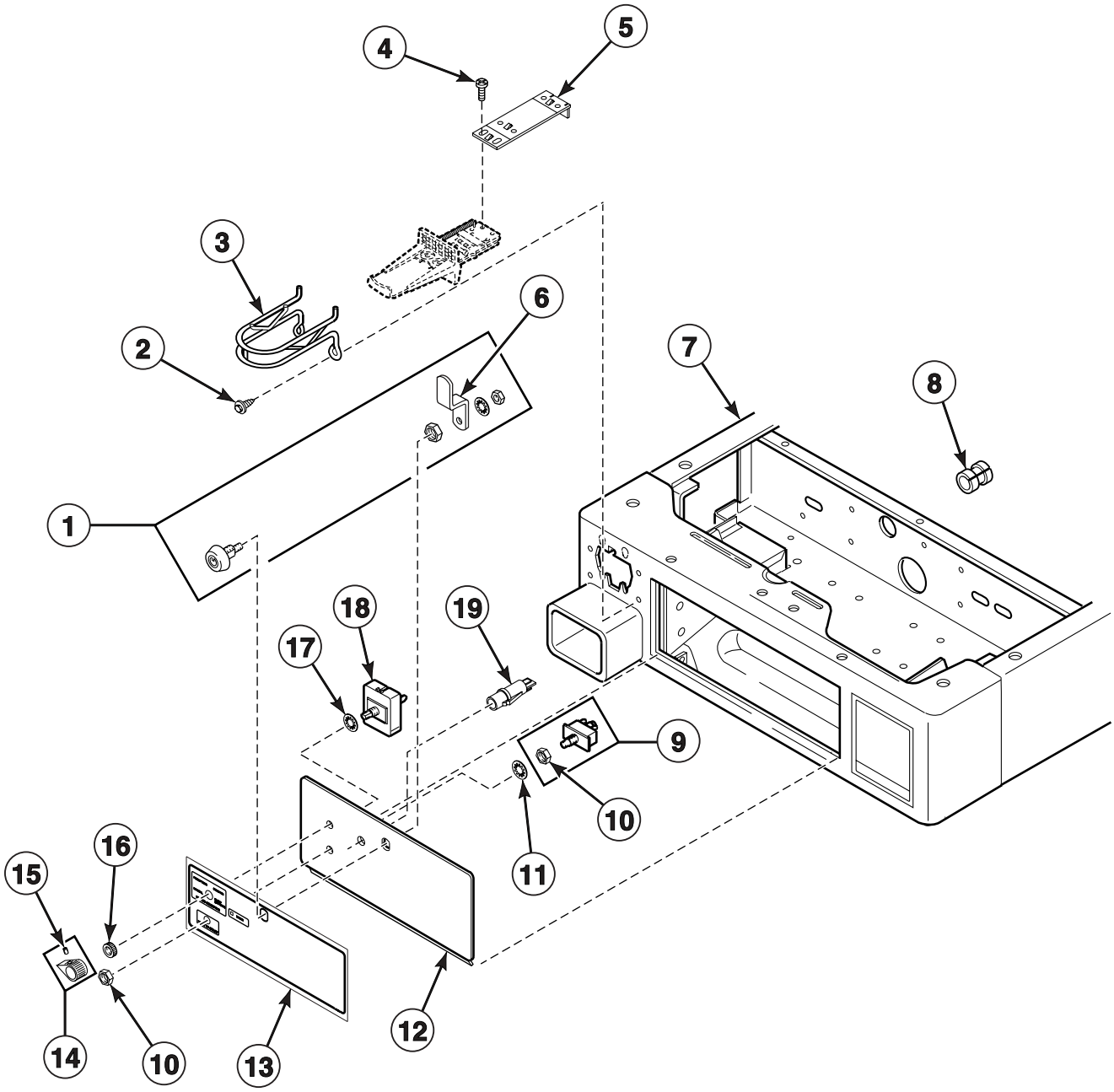

D366P_505678

© Copyright, Alliance Laundry Systems LLC – DO NOT COPY or TRANSMIT

Control Panel and Controls

REF	PART NO.	DESCRIPTION	COMMENTS
1	27260P	Lock Kit	Includes item 6
2	33562	Screw	
3	58181	Coin Slide Guard	
4	03950	Screw	
5	503455	Coin Slide Extension	
6	27261	Lock Cam	
7	505753*	Wrapper and Channel Assembly	
8	52113	Strain Relief	Gas models
	52151	Strain Relief	Electric models
9	55882	Switch Assembly	Includes item 10
10	52947	Nut	
11	25820	Washer	
12	504447*	Control Panel and Bracket Assembly	
13	504210	Overlay	Models SFE107*A and SFG109*A
	N/A	Overlay	Models HFE107*A1702, HFE107*C1702, HFG109*A1102 and HFG109*C1102
14	39897	Switch Knob	Includes item 15
15	N/A	Screw	
16	24205	Nut	
17	91176	Washer	
18	61512	Fabric Selector Switch	
19	32464	Light	

*** Add Letter To Designate Color. L - Almond W - White**

N/A = Part no longer available

© Copyright, Alliance Laundry Systems LLC – DO NOT COPY or TRANSMIT

Control Panel and Controls - Coin Drop

Models SFE507*A and SFG509*A

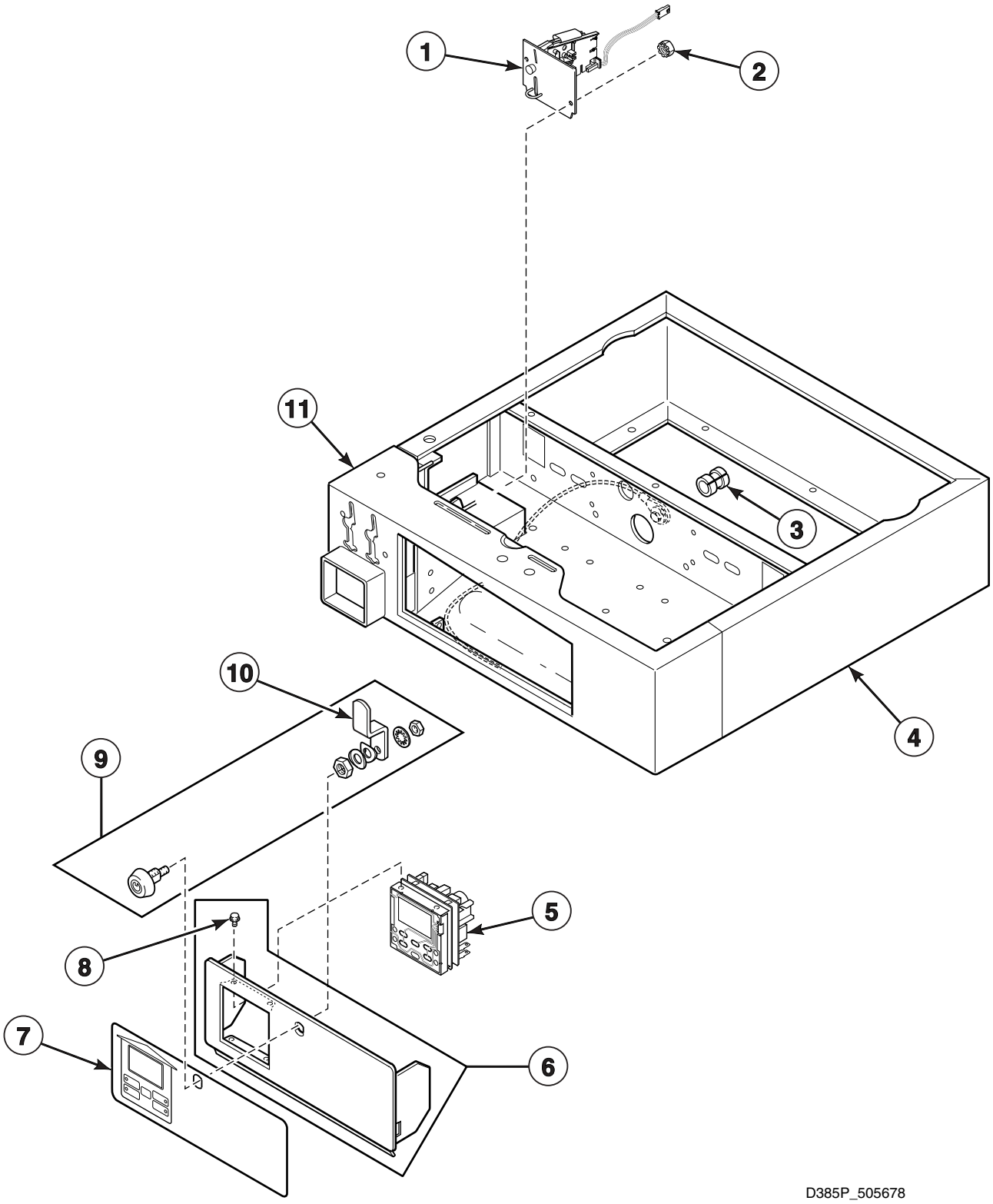

© Copyright, Alliance Laundry Systems LLC – DO NOT COPY or TRANSMIT

Control Panel and Controls - Coin Drop

REF	PART NO.	DESCRIPTION	COMMENTS
1	38479	Coin Drop	Single; U.S. quarter
2	29786	Nut	
3	52113	Strain Relief	Gas models
	52151	Strain Relief	Electric models
4	505753*	Wrapper and Channel Assembly	
5	M414050P	Control Kit	
6	505510*	Control Panel and Bracket Assembly	Includes item 8
7	N/A	Graphic Overlay	
8	501524	Screw	
9	27260P	Lock Kit	Includes item 10
10	27261	Lock Cam	
11	511633*	Front Assembly	

*** Add Letter To Designate Color. L - Almond W - White**

N/A = Part no longer available

© Copyright, Alliance Laundry Systems LLC – DO NOT COPY or TRANSMIT

Control Panel and Controls - Card Reader Installed

Models SFE707*A and SFG709*A

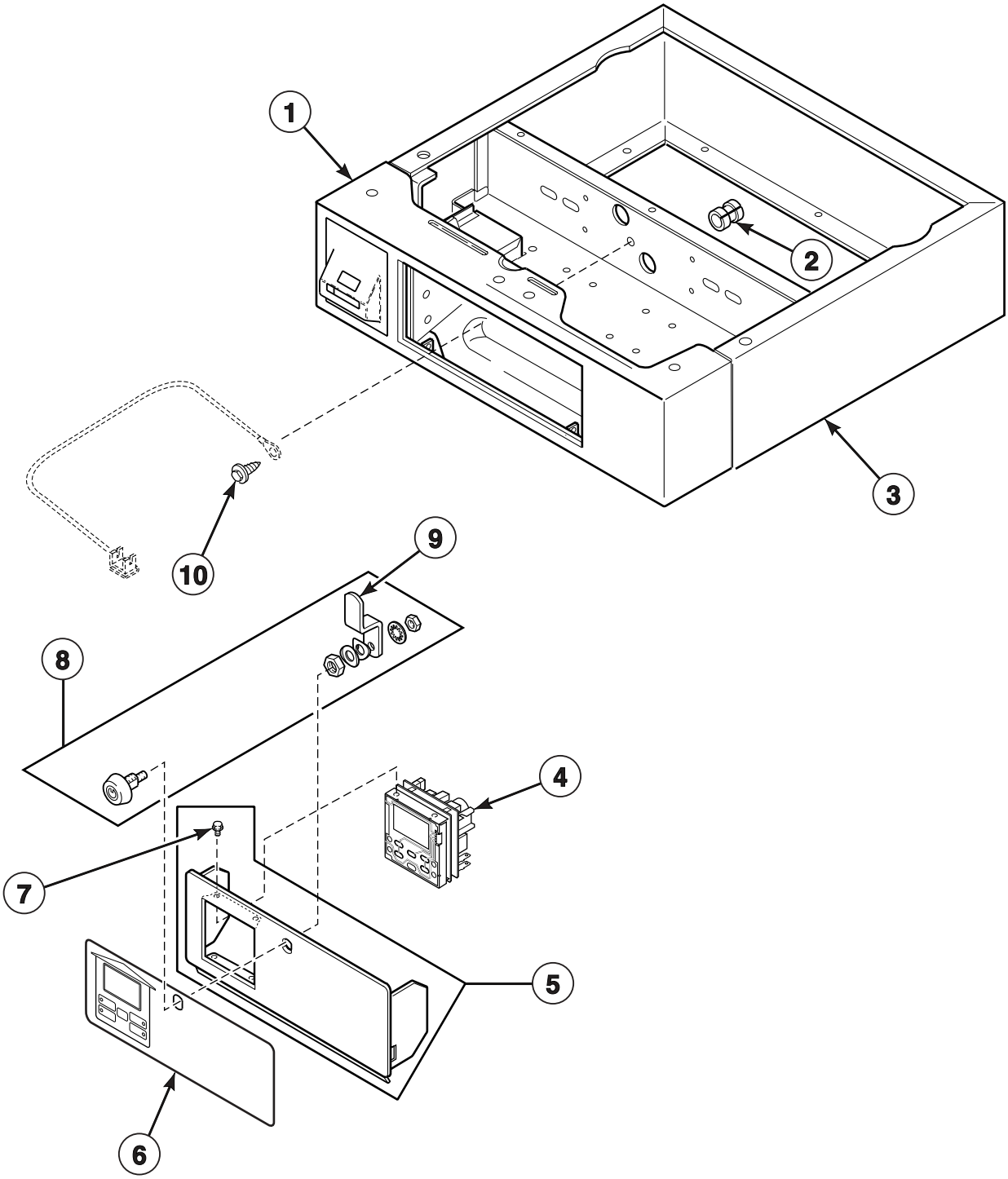

D384P_505678

© Copyright, Alliance Laundry Systems LLC – DO NOT COPY or TRANSMIT

Control Panel and Controls - Card Reader Installed

REF	PART NO.	DESCRIPTION	COMMENTS
1	505542*	Front Assembly	
2	52113	Strain Relief	Gas models
	52151	Strain Relief	Electric models
3	505753*	Wrapper and Channel Assembly	
4	M414050P	Control Kit	
5	505510*	Control Panel and Bracket Assembly	Includes item 7
6	N/A	Graphic Overlay	
7	501524	Screw	
8	27260P	Lock Kit	Includes item 9
9	27261	Lock Cam	
10	20530	Screw	

*** Add Letter To Designate Color. L - Almond W - White**

N/A = Part no longer available

© Copyright, Alliance Laundry Systems LLC – DO NOT COPY or TRANSMIT

Control Cabinet

Models HFE107*A1702, HFE107*C1702, HFG109*A1102, HFG109*C1102, SFE107*A and SFG109*A

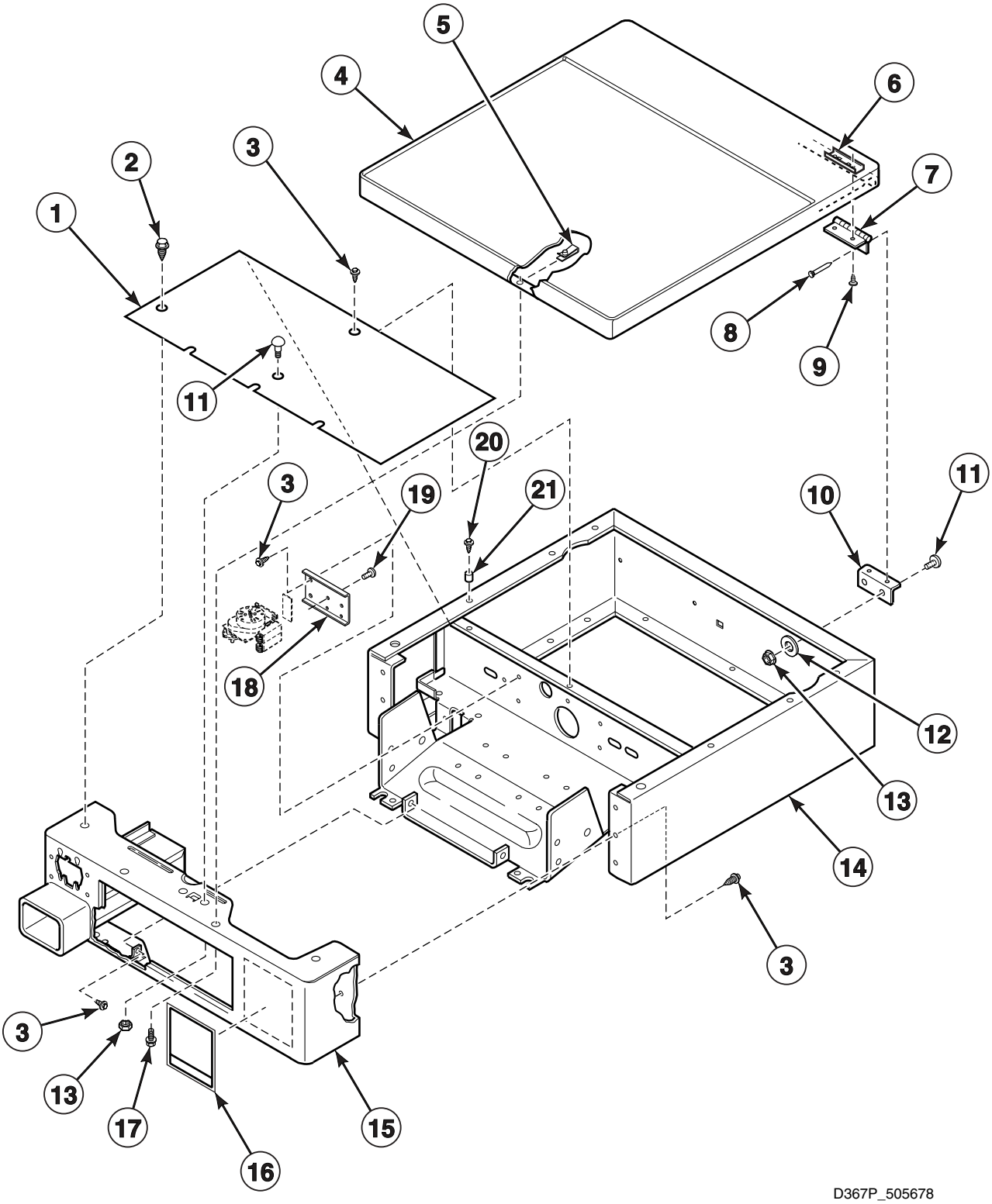

© Copyright, Alliance Laundry Systems LLC – DO NOT COPY or TRANSMIT

Control Cabinet

REF	PART NO.	DESCRIPTION	COMMENTS
1	N/A	Top-Security Panel	
2	36048	Screw	
3	503661	Screw	
4	511529*P	Cabinet Top Kit	Includes items 7 and 10
5	36020	Nut	
6	500236	Door Hinge Mounting Clip	
7	511036	Door Hinge	
8	685847	Pop Rivet	
9	500226	Screw	
10	504228	Top Mounting Bracket	
11	29651	Bolt	
12	800457	Washer	
13	29796	Nut	
14	505753*	Wrapper and Channel Assembly	
15	511523*	Security Cabinet Front Assembly	
16	504585	Instruction Overlay	
17	23008	Screw	
18	503017	Timer Bracket	
19	03203	Screw	
20	39733	Screw	
21	56079	Panel Locator	

*** Add Letter To Designate Color. L - Almond W - White**

N/A = Part no longer available

© Copyright, Alliance Laundry Systems LLC – DO NOT COPY or TRANSMIT

Control Cabinet - Coin Drop

Models SFE507*A and SFG509*A

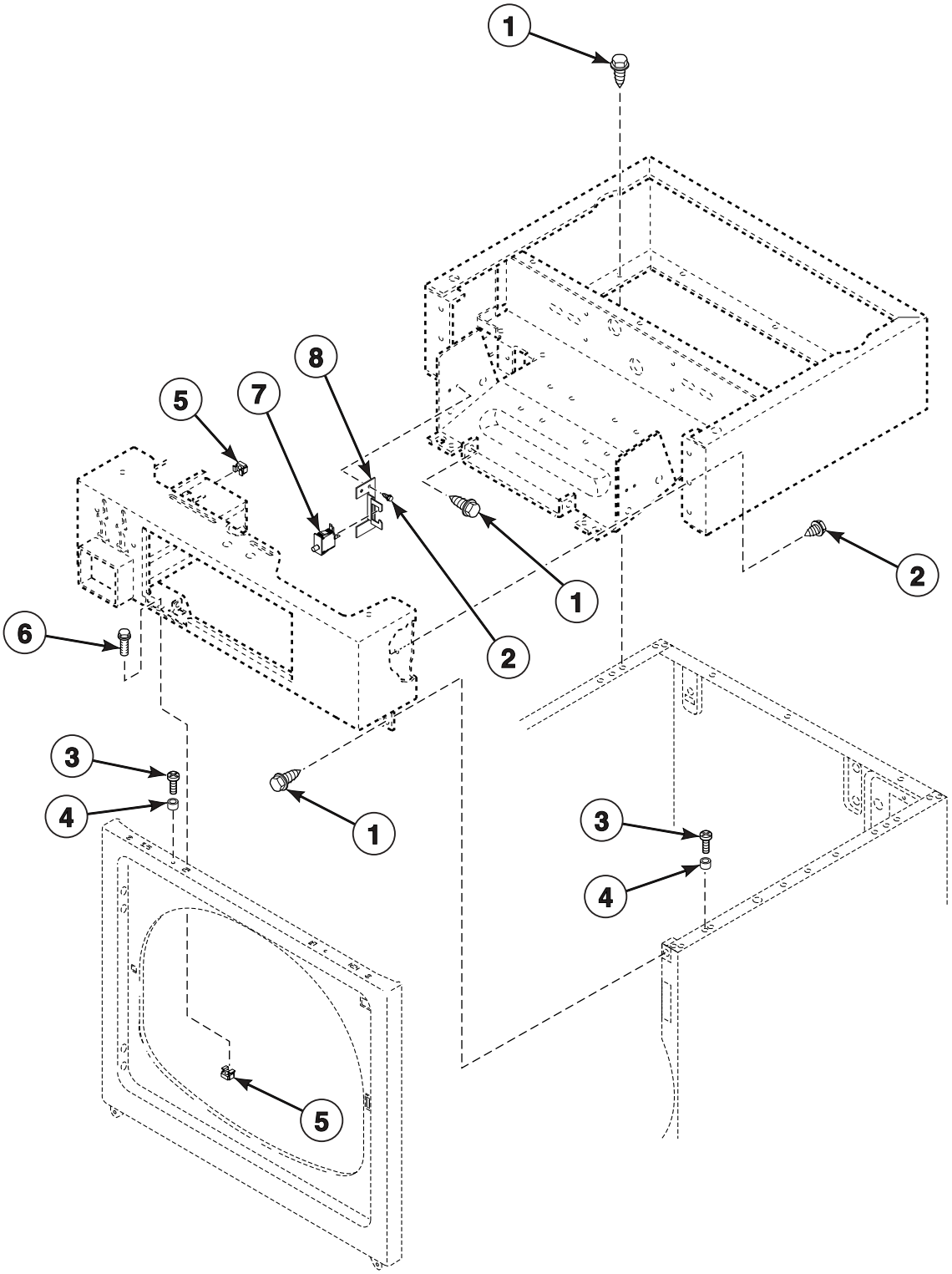

D386P_505678

© Copyright, Alliance Laundry Systems LLC – DO NOT COPY or TRANSMIT

Control Cabinet - Coin Drop

REF	PART NO.	DESCRIPTION	COMMENTS
1	503661	Screw	
2	503688	Screw	
3	39733	Screw	
4	56079	Panel Locator	
5	80077	Nut	
6	502431	Screw	
7	504570	Switch	
8	38087	Door Switch Bracket	

*** Add Letter To Designate Color. L - Almond W - White**

© Copyright, Alliance Laundry Systems LLC – DO NOT COPY or TRANSMIT

Control Cabinet - Card Reader Installed

Models SFE707*A and SFG709*A

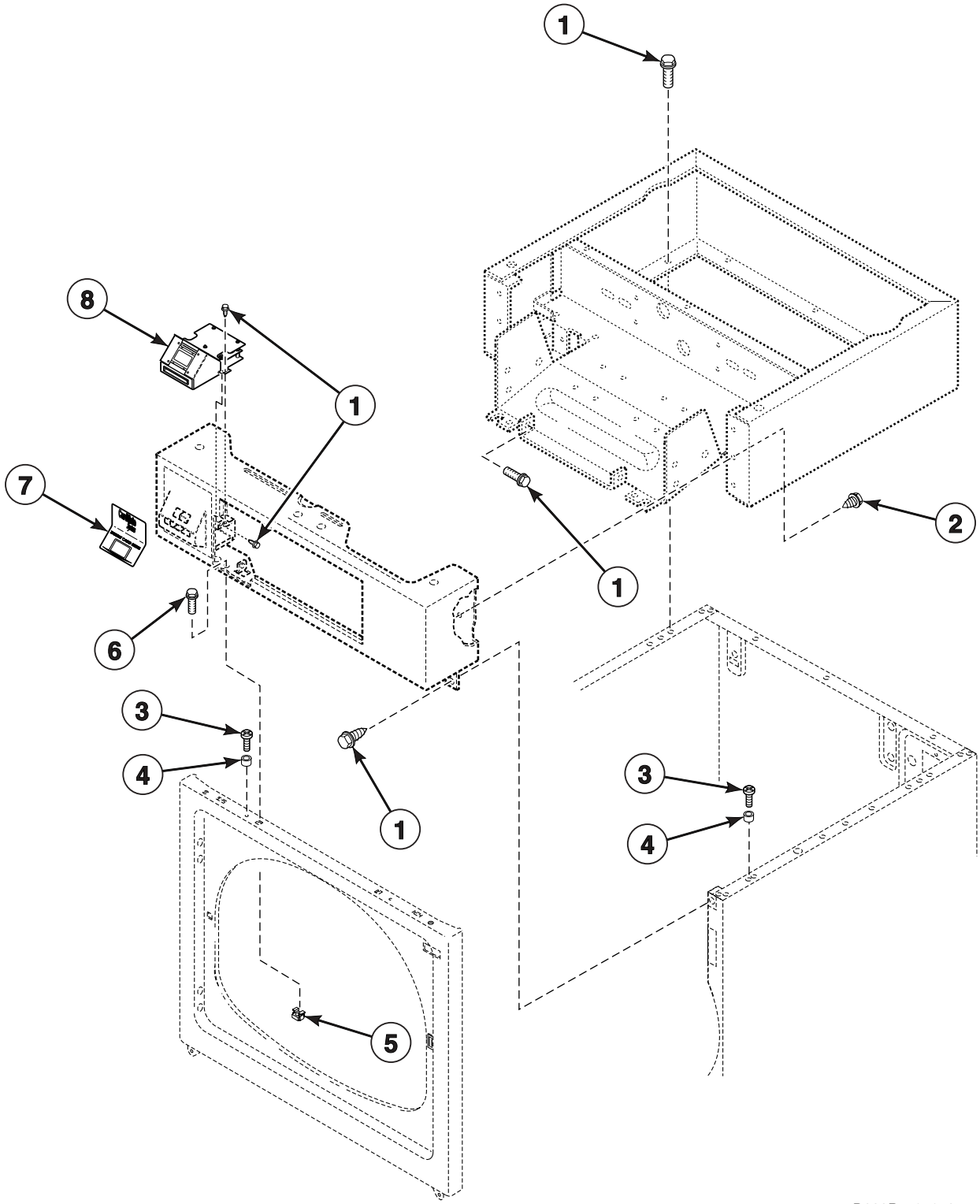

© Copyright, Alliance Laundry Systems LLC – DO NOT COPY or TRANSMIT

Control Cabinet - Card Reader Installed

REF	PART NO.	DESCRIPTION	COMMENTS
1	503661	Screw	
2	503688	Screw	
3	39733	Screw	
4	56079	Panel Locator	
5	80077	Nut	
6	502431	Screw	
7	38192	Card Reader Instruction Overlay	
8	39685	Card Reader	

*** Add Letter To Designate Color. L - Almond W - White**

© Copyright, Alliance Laundry Systems LLC – DO NOT COPY or TRANSMIT

2 Switch Timer

Models HFE107*A1702, HFE107*C1702, HFG109*A1102, HFG109*C1102, SFE107*A and SFG109*A

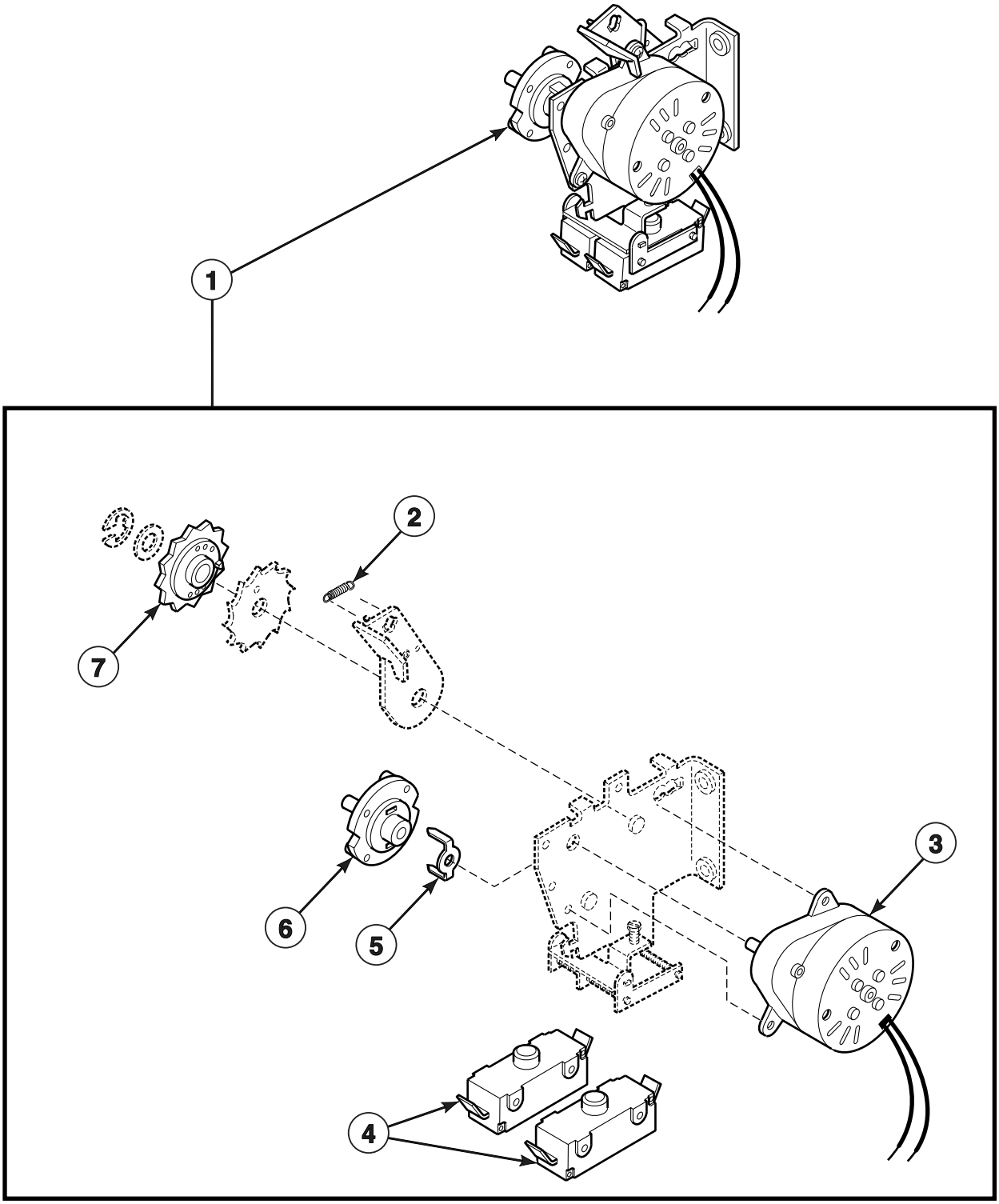

D362P_505678

© Copyright, Alliance Laundry Systems LLC – DO NOT COPY or TRANSMIT

2 Switch Timer

REF	PART NO.	DESCRIPTION	COMMENTS
1	510628P	Accumulator Replacement Kit	
2	53244	Pawl Spring	
3	512017P	Timer Motor	
4	N/A	Switch	
5	M400754	Coin Meter Drive	
6	53240	Timing Cam	60 minute; 3 pin
	53241	Timing Cam	45 minute; 4 pin
	53242	Timing Cam	30 minute; 6 pin
	53243	Timing Cam	20 minute; 9 pin
7	53239	Ratchet Wheel	

*** Add Letter To Designate Color. L - Almond W - White**

N/A = Part no longer available

© Copyright, Alliance Laundry Systems LLC – DO NOT COPY or TRANSMIT

Loading Door

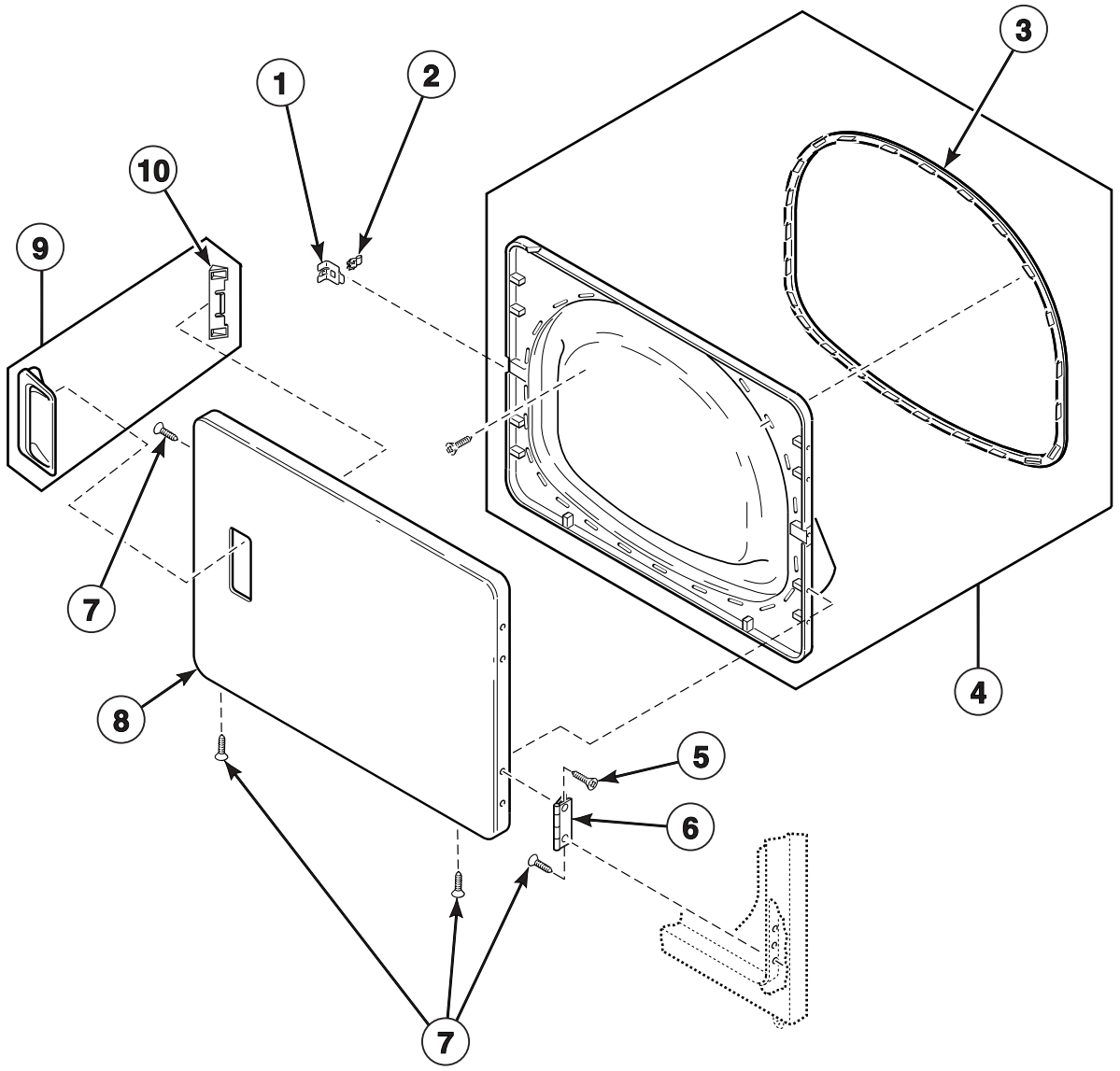

DRY1737P_505678

© Copyright, Alliance Laundry Systems LLC – DO NOT COPY or TRANSMIT

Loading Door

REF	PART NO.	DESCRIPTION	COMMENTS
1	510127	Door Strike Mount	
2	510181	Door Strike	
3	510147	Liner Door Seal	
4	510163WP	Liner, Seal and Grill Assembly	Includes item 3
5	505295	Screw	
6	511036	Door Hinge	
7	500226	Screw	
8	510013*	Dryer Door	
9	510103*P	Door Pull and Wedge Kit	Includes item 10
10	510129	Door Handle Wedge	

*** Add Letter To Designate Color. L - Almond W - White**

© Copyright, Alliance Laundry Systems LLC – DO NOT COPY or TRANSMIT

Access Panel, Front Panel and Seal

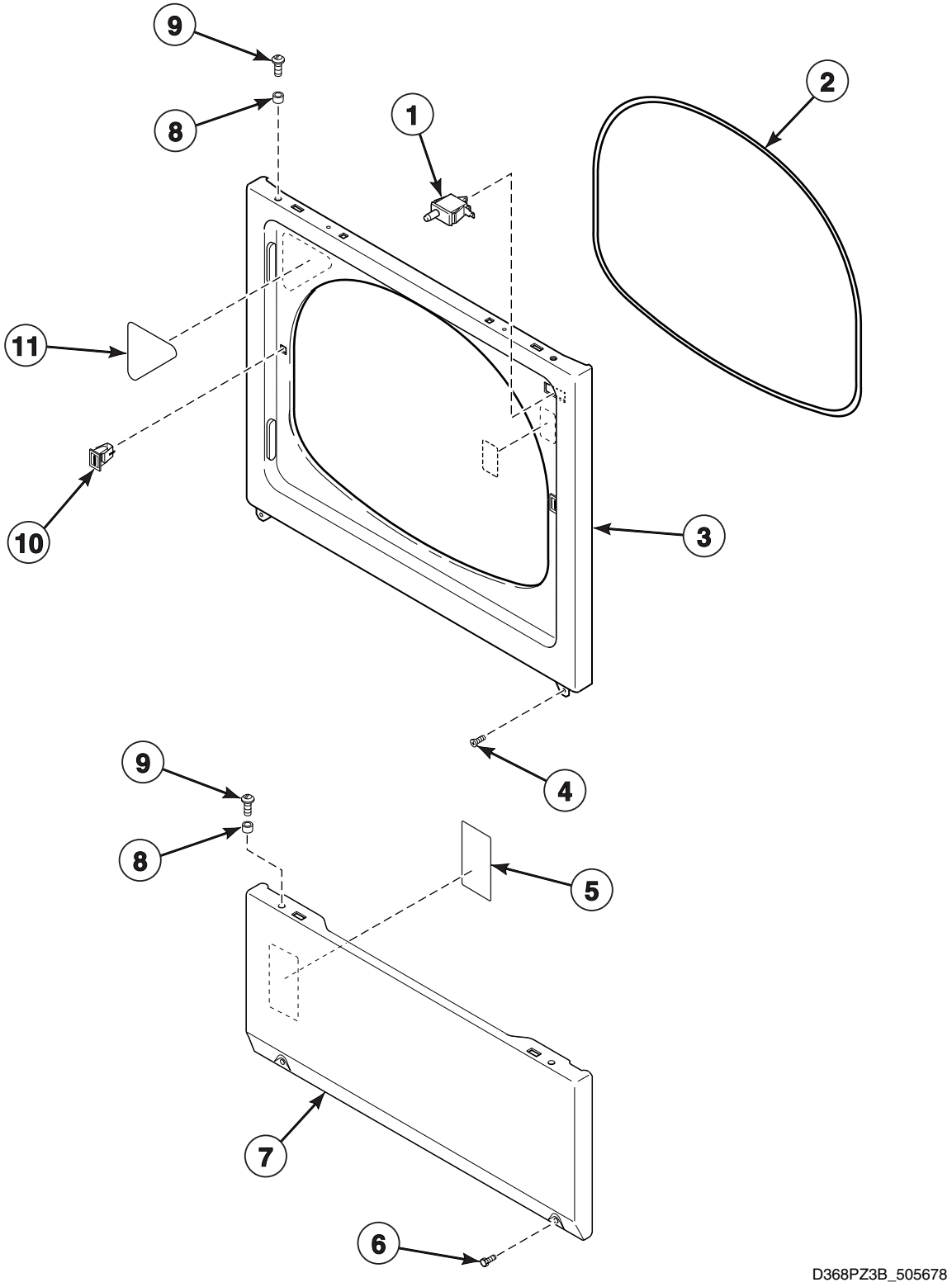

© Copyright, Alliance Laundry Systems LLC – DO NOT COPY or TRANSMIT

Access Panel, Front Panel and Seal

REF	PART NO.	DESCRIPTION	COMMENTS
	282P4	Torx Bit	Use with 62853 Screw
	24161	Bit Holder	Use with 62853 Screw
1	504570	Switch	
2	511056	Front Panel Seal	
3	510066*	Front Panel	
4	503661	Screw	
5	511004	Gas Clearance Label	Gas models
6	33562	Screw	
	62853	Screw	Optional for added security
7	510069*	Access Panel	
8	56079	Panel Locator	
9	39733	Screw	
10	510177	Door Catch Assembly	
11	500281	Warning/Caution Label	

*** Add Letter To Designate Color. L - Almond W - White**

© Copyright, Alliance Laundry Systems LLC – DO NOT COPY or TRANSMIT

Motor, Exhaust Fan and Belt

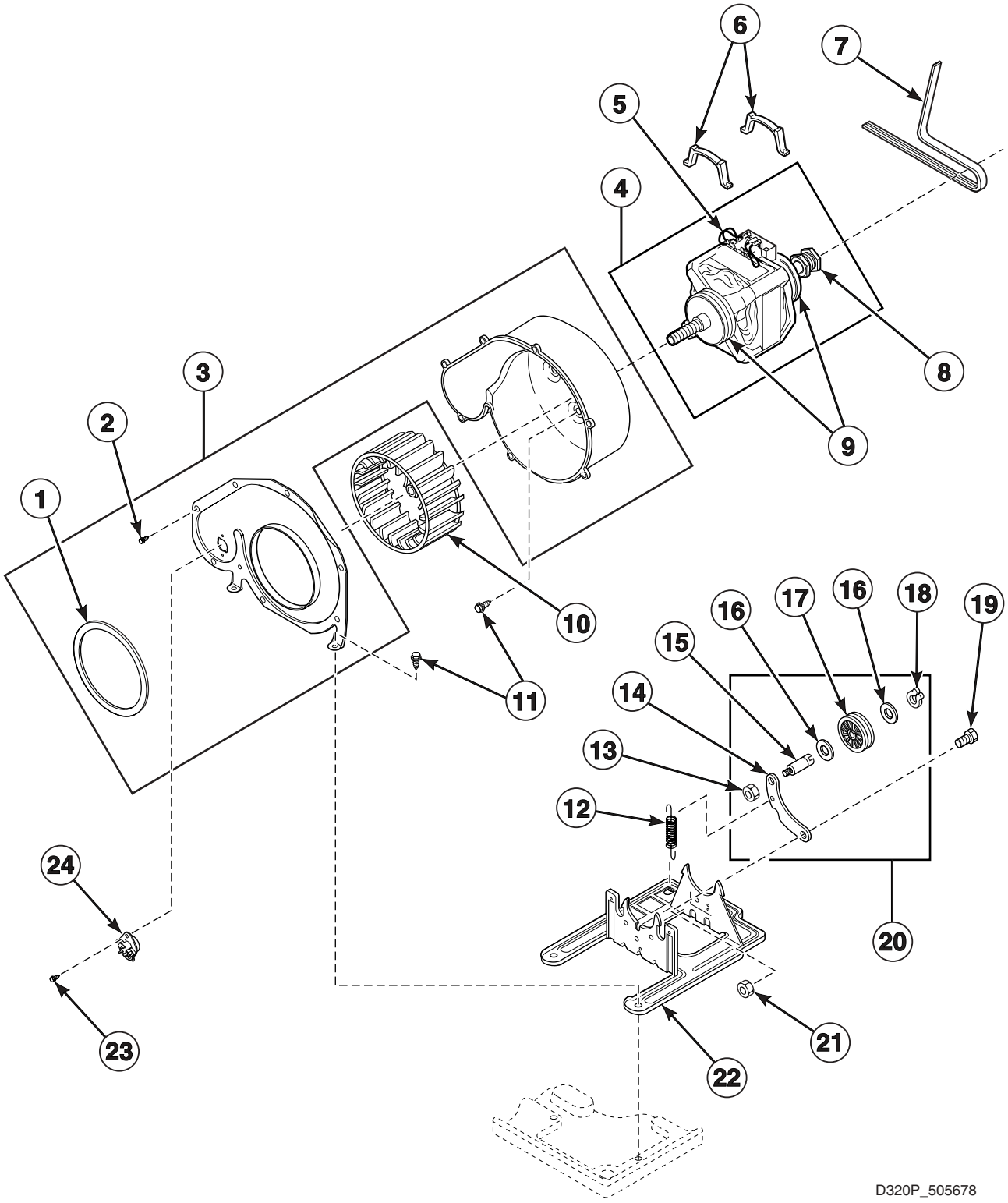

© Copyright, Alliance Laundry Systems LLC – DO NOT COPY or TRANSMIT

Motor, Exhaust Fan and Belt

REF	PART NO.	DESCRIPTION	COMMENTS
1	510238	Blower Housing Seal	
2	31260	Screw	
3	511969P	Blower Housing and Cover Kit	Includes items 1 and 2
4	511629P	Motor and Pulley Assembly	Includes items 5, 8 and 9
5	501218P	Motor Switch Kit	Does not include thermal protector
6	510180	Motor Mount Clamp	
7	511255	Cylinder Belt	
8	512196	Motor Pulley	
9	590P3	Motor Hub Ring Kit	
10	510139	Blower Fan Assembly	
11	503661	Screw	
12	510185	Idler Spring	
13	56156	Nut	
14	510133	Idler Lever	
15	56461	Shaft	
16	52549	Washer	
17	510142	Idler Wheel and Bearing Assembly	
18	23748	Retaining Ring	
19	500824	Screw	
20	510158	Idler Lever and Wheel Assembly	Includes items 13-18
21	52566	Nut	
22	510060	Motor Mount	
23	33561	Screw	
24	504515	Thermostat	Green

© Copyright, Alliance Laundry Systems LLC – DO NOT COPY or TRANSMIT

Front Bulkhead, Air Duct, Felt Seal and Cylinder

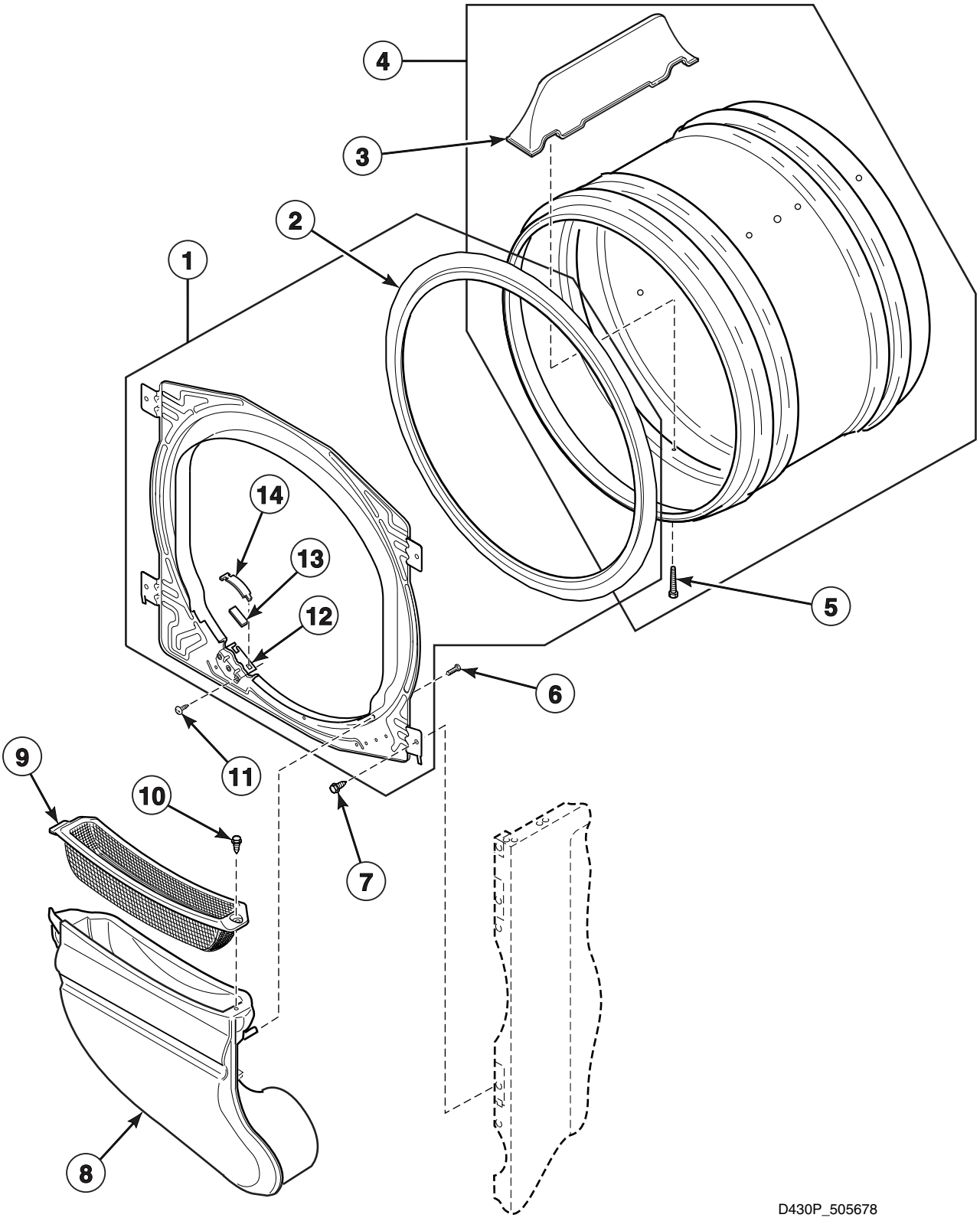

© Copyright, Alliance Laundry Systems LLC – DO NOT COPY or TRANSMIT

Front Bulkhead, Air Duct, Felt Seal and Cylinder

REF	PART NO.	DESCRIPTION	COMMENTS
	511637	Adhesive	For cylinder seal
1	510266	Front Bulkhead Assembly	Includes items 2 and 12-14
2	510207P	Cylinder Seal Assembly	
3	503703	Cylinder Baffle	
4	510265P	Cylinder Assembly	Includes items 3 and 5
5	62588	Screw	
6	500226	Screw	
7	503661	Screw	
8	510151	Air Duct Assembly	
9	503980	Lint Filter	
10	501285	Screw	
11	70058501	Pop Rivet	
12	510145	Cylinder Glide Bracket	
13	510189	Felt Pad	
14	510187	Cylinder Glide	2 required per side

© Copyright, Alliance Laundry Systems LLC – DO NOT COPY or TRANSMIT

Rear Bulkhead, Felt Seal, Cylinder Roller and Terminal Block

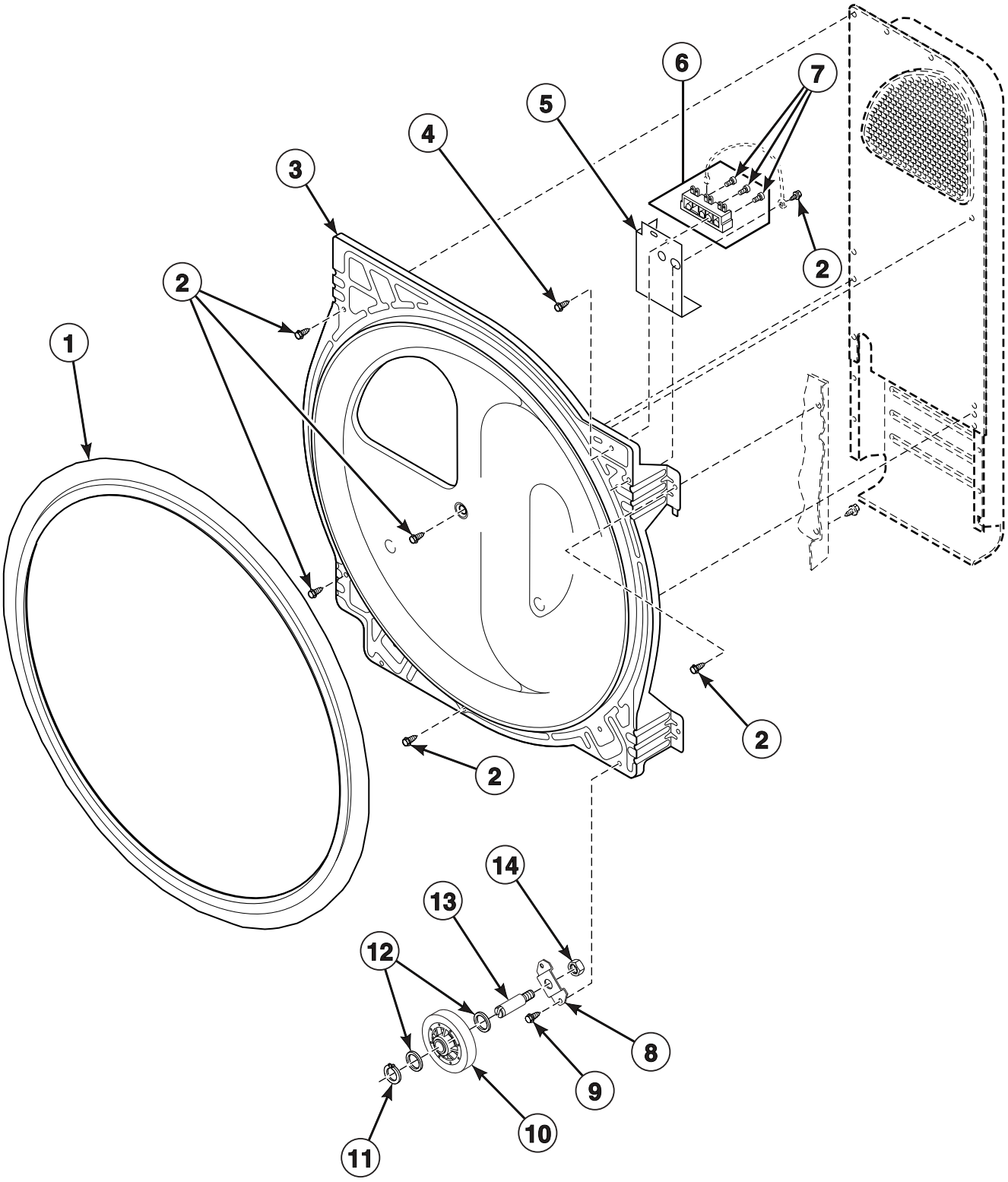

© Copyright, Alliance Laundry Systems LLC – DO NOT COPY or TRANSMIT

Rear Bulkhead, Felt Seal, Cylinder Roller and Terminal Block

REF	PART NO.	DESCRIPTION	COMMENTS
	511637	Adhesive	For cylinder seal
1	510207P	Cylinder Seal Assembly	
2	503661	Screw	
3	511082	Rear Bulkhead Assembly	
4	501285	Screw	
5	510237	Terminal Block Shield	Electric models
6	510190P	Terminal Block Assembly	Includes 3 of item 7; Electric models
7	61199	Screw	
8	510100	Cylinder Roller Bracket	
9	503688	Screw	
10	510708P	Cylinder Roller	
11	23748	Retaining Ring	
12	52549	Washer	
13	56461	Shaft	
14	56156	Nut	

© Copyright, Alliance Laundry Systems LLC – DO NOT COPY or TRANSMIT

Heater Duct and Element Assembly

Electric Model Dryers

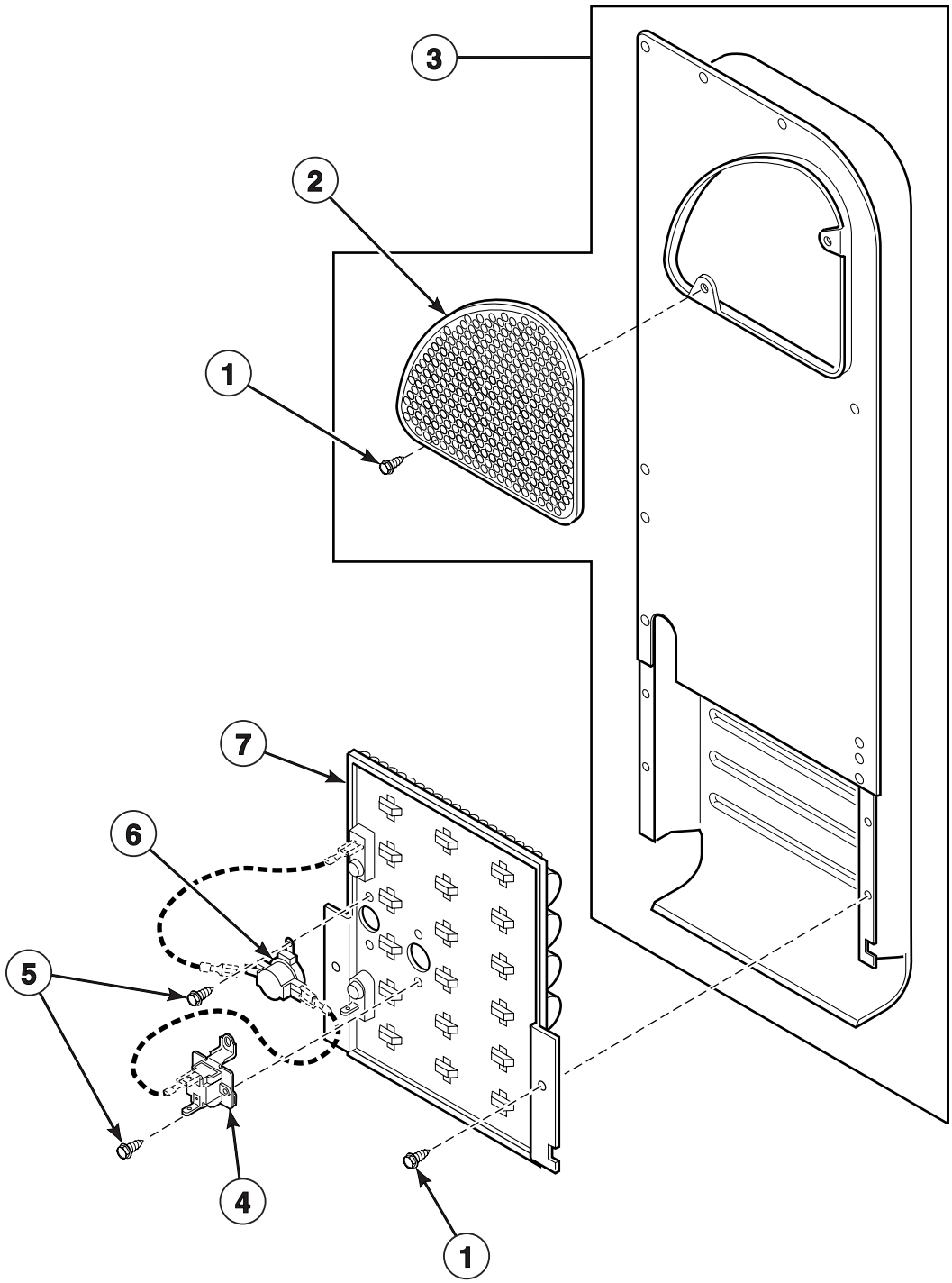

D350P_505678

© Copyright, Alliance Laundry Systems LLC – DO NOT COPY or TRANSMIT

Heater Duct and Element Assembly

REF	PART NO.	DESCRIPTION	COMMENTS
1	503688	Screw	
2	500820	Outlet Cover	
3	510025P	Heater Duct and Screw Assembly	Includes items 1 and 2
4	511412	Thermal Fuse Assembly	
5	23222	Screw	
6	510701	Limit Thermostat	
7	510329	Heater Assembly	5.33 kW; 240 Volt; Orange
	510325	Heater	4.75 kW; 208 Volt; White

© Copyright, Alliance Laundry Systems LLC – DO NOT COPY or TRANSMIT

Heater Duct Assembly

Gas Model Dryers

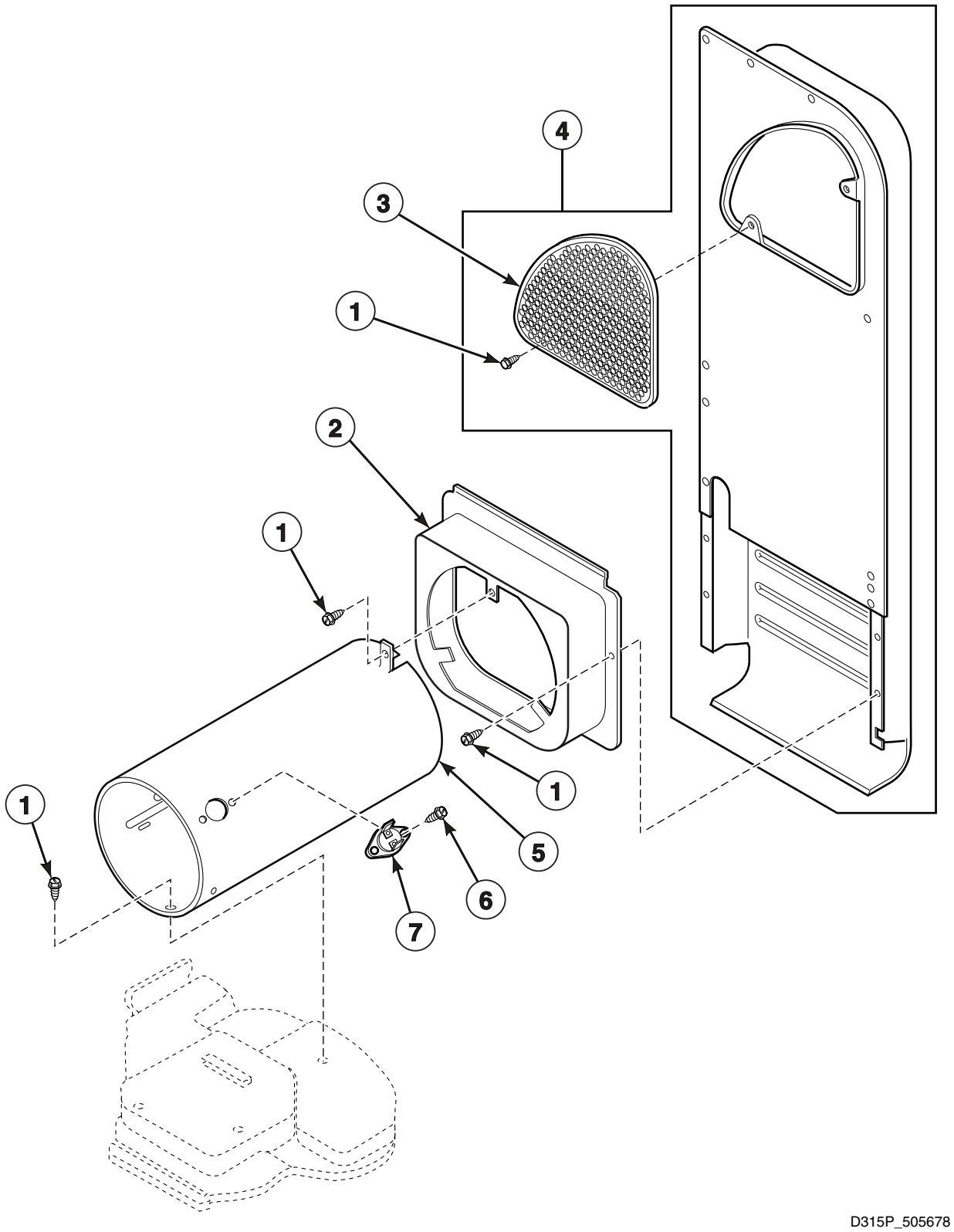

D315P_505678

© Copyright, Alliance Laundry Systems LLC – DO NOT COPY or TRANSMIT

Heater Duct Assembly

REF	PART NO.	DESCRIPTION	COMMENTS
1	503688	Screw	
2	510101	Heat Duct Shroud	
3	500820	Outlet Cover	
4	510025P	Heater Duct and Screw Assembly	Includes items 1 and 3
5	510131	Combustion Duct	
6	51782	Screw	
7	510702	Limit Thermostat	Black

© Copyright, Alliance Laundry Systems LLC – DO NOT COPY or TRANSMIT

Gas Valve, Igniter and Gas Conversion Kits

Gas Model Dryers

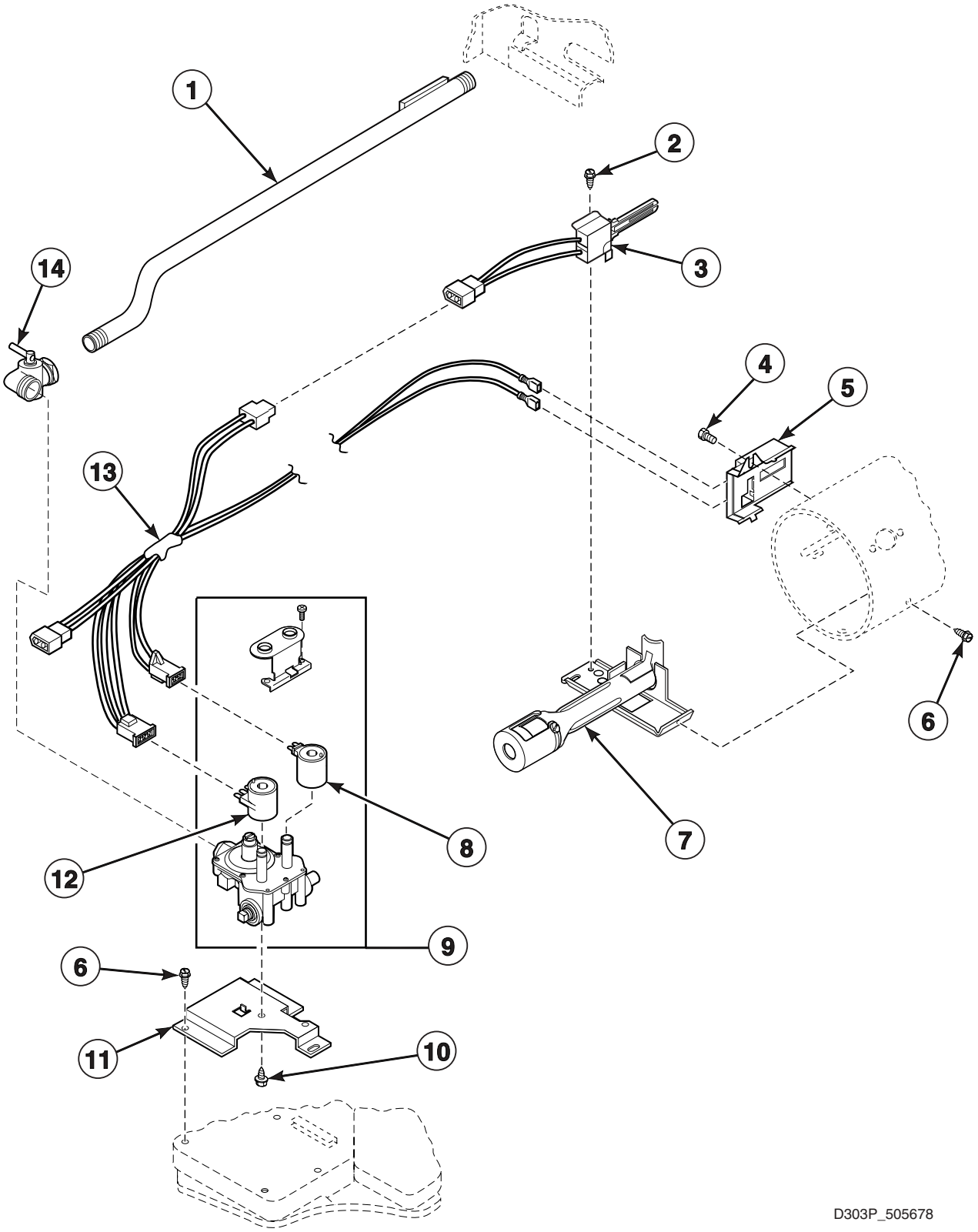

© Copyright, Alliance Laundry Systems LLC – DO NOT COPY or TRANSMIT

Gas Valve, Igniter and Gas Conversion Kits

REF	PART NO.	DESCRIPTION	COMMENTS
	458P3	L.P. Conversion Kit	Used to convert dryers from Natural Gas (N.G.) or Mixed Gas to Liquid Petroleum Gas (L.P.)
	459P3	N.G. Conversion Kit	Used to convert dryers from L.P. to N.G. or Mixed Gas
1	510204	Lead-In Pipe Assembly	
2	51782	Screw	
3	510184P	Igniter and Bracket Assembly	
4	23222	Screw	
5	510213	Sensor	
6	503688	Screw	
7	510149	Burner Assembly	
8	58804B	Secondary Coil	
9	60353	Gas Valve Assembly	Includes items 8 and 12
10	56124	Screw	
11	510128	Gas Valve Mounting Bracket	
12	58804A	Booster and Holding Coil	
13	510530	Gas Valve Wire Harness Assembly	
14	510205	Elbow Shut-off Valve	

© Copyright, Alliance Laundry Systems LLC – DO NOT COPY or TRANSMIT

Cabinet, Exhaust Duct and Base

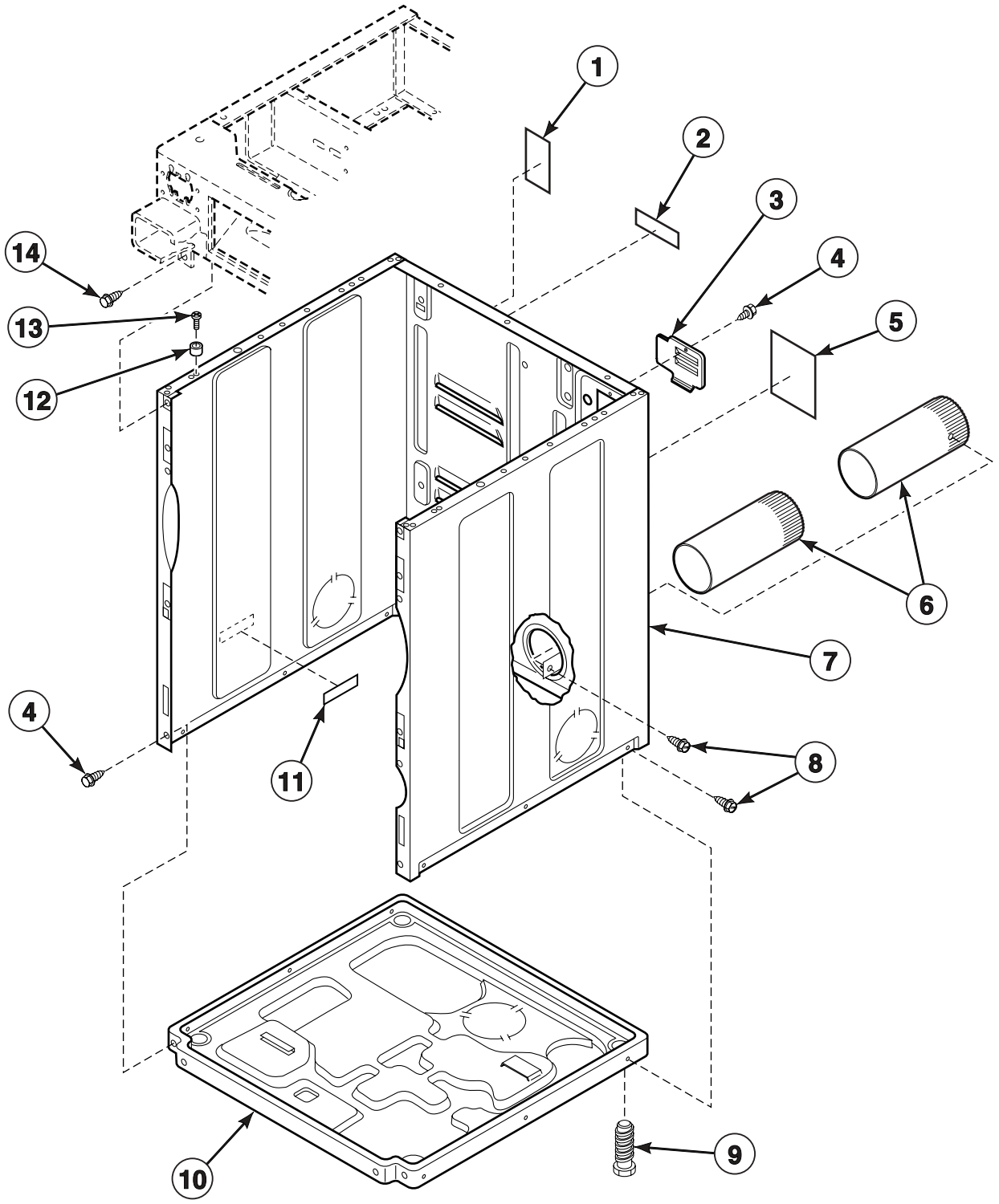

© Copyright, Alliance Laundry Systems LLC – DO NOT COPY or TRANSMIT

Cabinet, Exhaust Duct and Base

REF	PART NO.	DESCRIPTION	COMMENTS
1	511004	Gas Clearance Label	Gas models
2	505281	Disconnect Power Warning Label	
3	510903	Access Panel Plate	
4	503661	Screw	
5	511005	Electric Clearance Label	Electric models
6	510137	Exhaust Duct	
7	727P3*	Panel Kit	
8	503688	Screw	
9	510135	Leveling Leg	
10	510084	Dryer Base	
11	61294	Fuse Notice Label	Electric models
12	56079	Panel Locator	
13	39733	Screw	
14	33562	Screw	

*** Add Letter To Designate Color. L - Almond W - White**

© Copyright, Alliance Laundry Systems LLC – DO NOT COPY or TRANSMIT

Power Cord

Gas Models

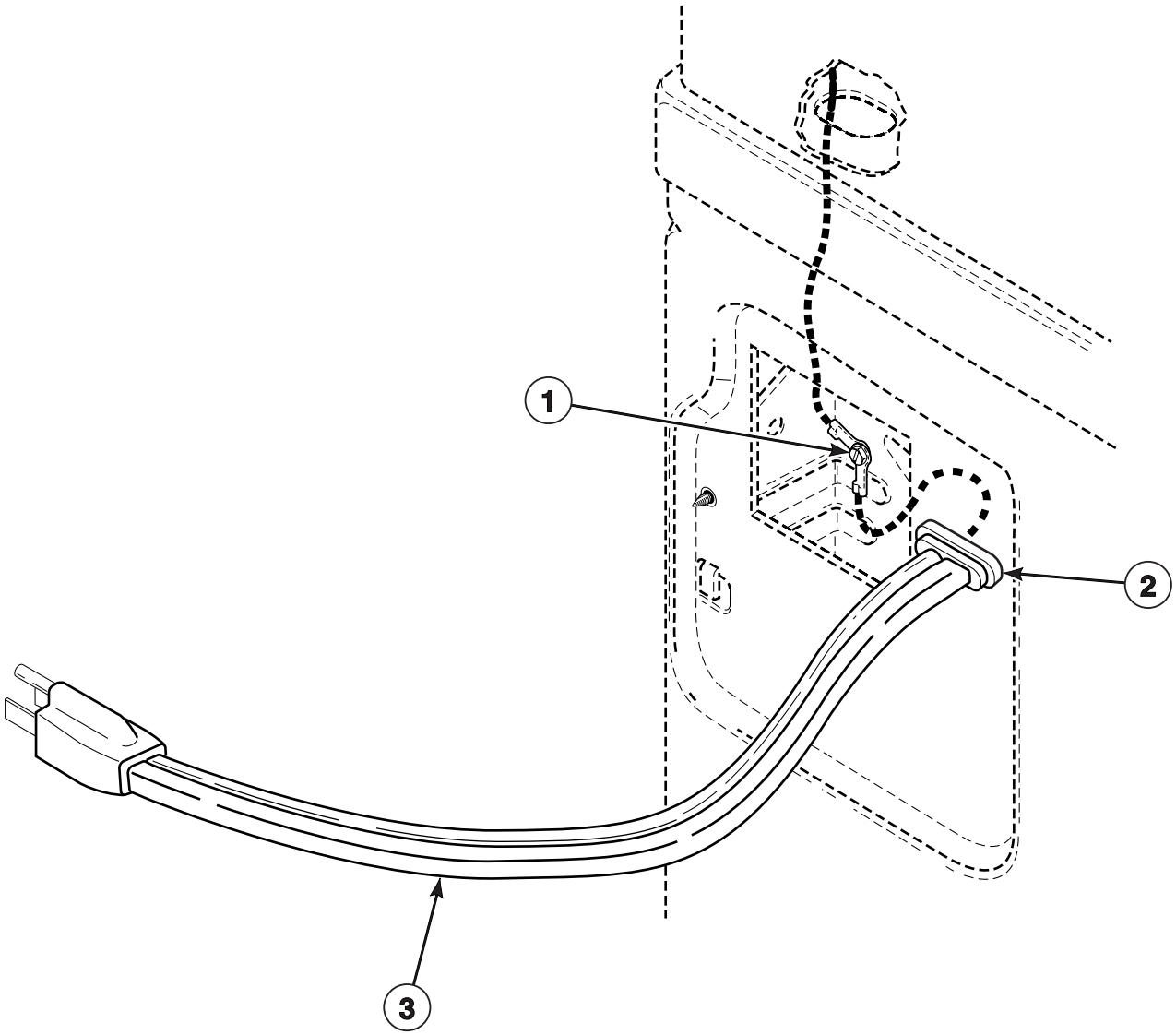

D298P_505678

© Copyright, Alliance Laundry Systems LLC – DO NOT COPY or TRANSMIT

Power Cord

REF	PART NO.	DESCRIPTION	COMMENTS
1	20530	Screw	
2	38384	Strain Relief	
3	59308	Lead-In Cord	

© Copyright, Alliance Laundry Systems LLC – DO NOT COPY or TRANSMIT

Terminal Block and Terminals

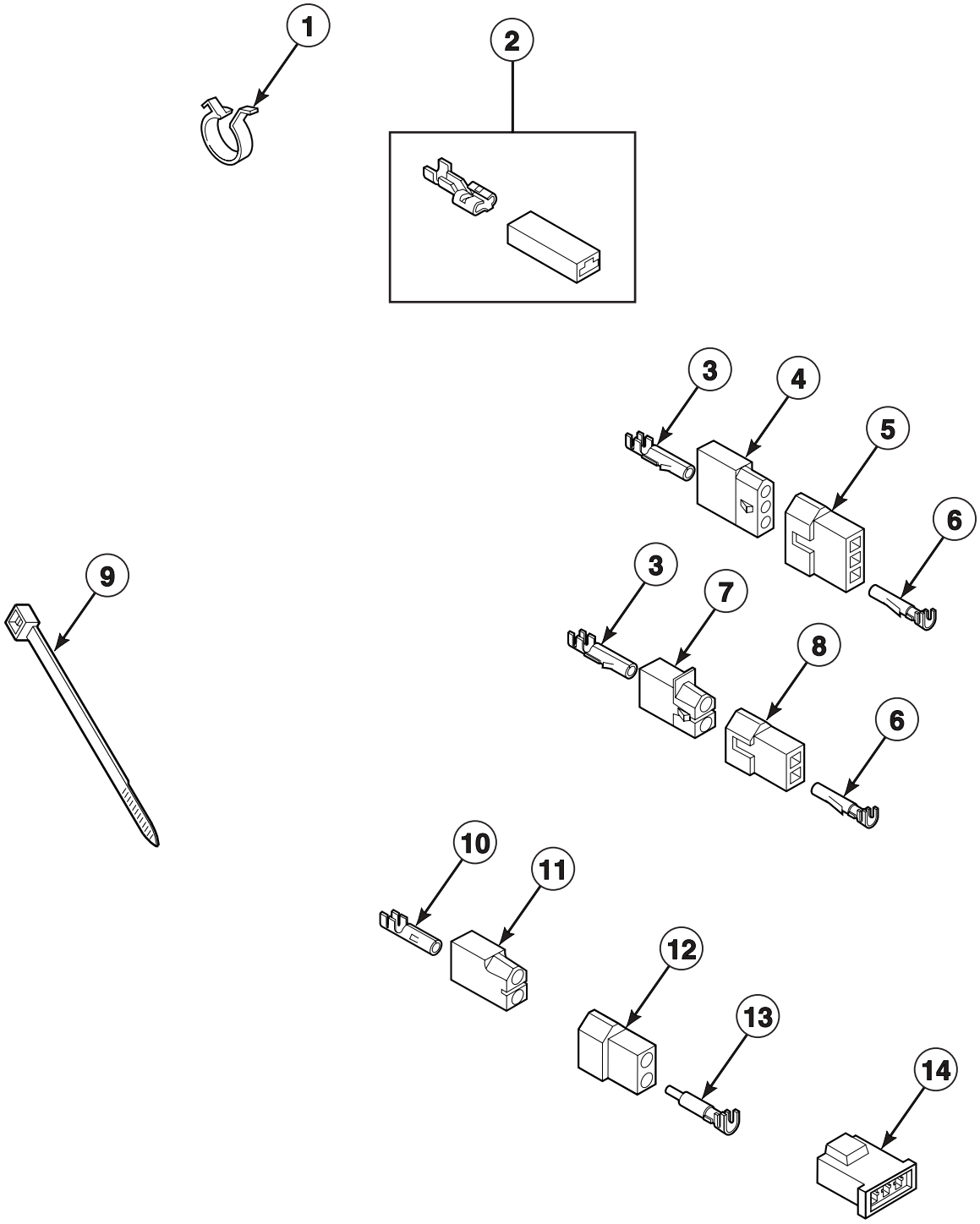

DRY1746P_505678

© Copyright, Alliance Laundry Systems LLC – DO NOT COPY or TRANSMIT

Terminal Block and Terminals

REF	PART NO.	DESCRIPTION	COMMENTS
1	504034	Wire Clip	
2	00360	Ultra Pod Terminal	1/4 inch; (1) 12 gauge wire or (2) 18 gauge wires
3	00117	Female Pin Terminal	
4	23039	3 Circuit Receptacle	
5	23040	Plug	3 circuit
6	00116	Male Pin Terminal	
7	56451	2 Circuit Receptacle	
8	56448	2 Circuit Plug	
9	55881	Harness Strap	
10	00130	Female Pin Terminal	
11	56265	2 Circuit Receptacle	
12	56266	2 Circuit Plug	
13	00127	Male Pin Terminal	
14	58800	3 Circuit Connector	

© Copyright, Alliance Laundry Systems LLC – DO NOT COPY or TRANSMIT

Terminals

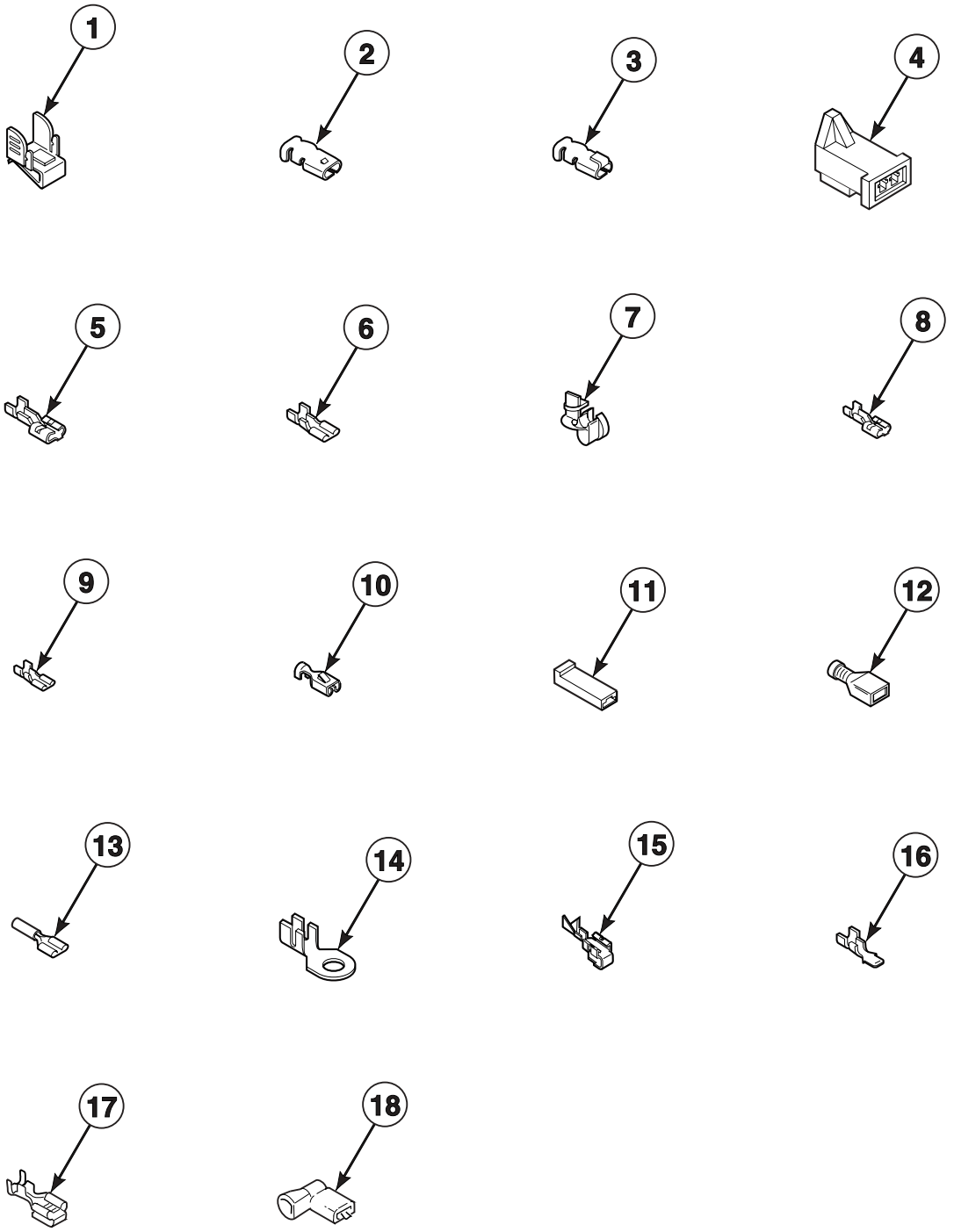

D322P_505678

© Copyright, Alliance Laundry Systems LLC – DO NOT COPY or TRANSMIT

Terminals

REF	PART NO.	DESCRIPTION	COMMENTS
1	00161	Grounding Clip	
2	00189	Female Spade Terminal	
3	00361	Female Piggyback Terminal	Receptacle connector
4	58799	2 Circuit Connector	
5	00223	Female Spade Terminal	1/4 inch; (1) 18 gauge wire
	00121	Female Spade Terminal	1/4 inch; (2) 18 gauge wires or (1) 12 gauge wire
	00245	Spade Terminal	1/4 inch; (1) 22 gauge wire
6	00124	Female Spade Terminal	3/16 inch; (1) 18 gauge wire; .020 tab
	00156	Female Spade Terminal	3/16 inch; Thermostat wire; .032 tab
	00209	Female Spade Terminal	3/16 inch; (2) 18 gauge wires; .020 tab
7	38384	Strain Relief	
8	00346	Terminal	
9	00347	Terminal	
10	00115	Female Spade Terminal	1/4 inch; (1) 18 gauge wire
11	90789	Receptacle Housing	
12	00359	Ultra Pod Terminal	1/4 inch
	00165	Insulated Female Terminal	3/16 inch
13	N/A	Pre-Insulated Spade Terminal	1/4 inch; (1) 18 gauge wire
	00215	Pre-Insulated Spade Terminal	1/4 inch; (1) 12 gauge wire
14	00110	Ring Terminal	No. 10; (1) 18 gauge wire
	00111	Ring Terminal	No. 10; (2) 18 gauge wires or (1) 12 gauge wire
15	00114	Female Spade Terminal	1/4 inch; Double connector
16	00139	Male Tab Terminal	1/4 inch; (2) 18 gauge wires or (1) 12 gauge wire
17	00344	Female Tab Terminal	
18	00345	Flag Insulated Terminal	

N/A = Part no longer available

© Copyright, Alliance Laundry Systems LLC – DO NOT COPY or TRANSMIT

Motor Connection Block, Terminal Extractor Tools

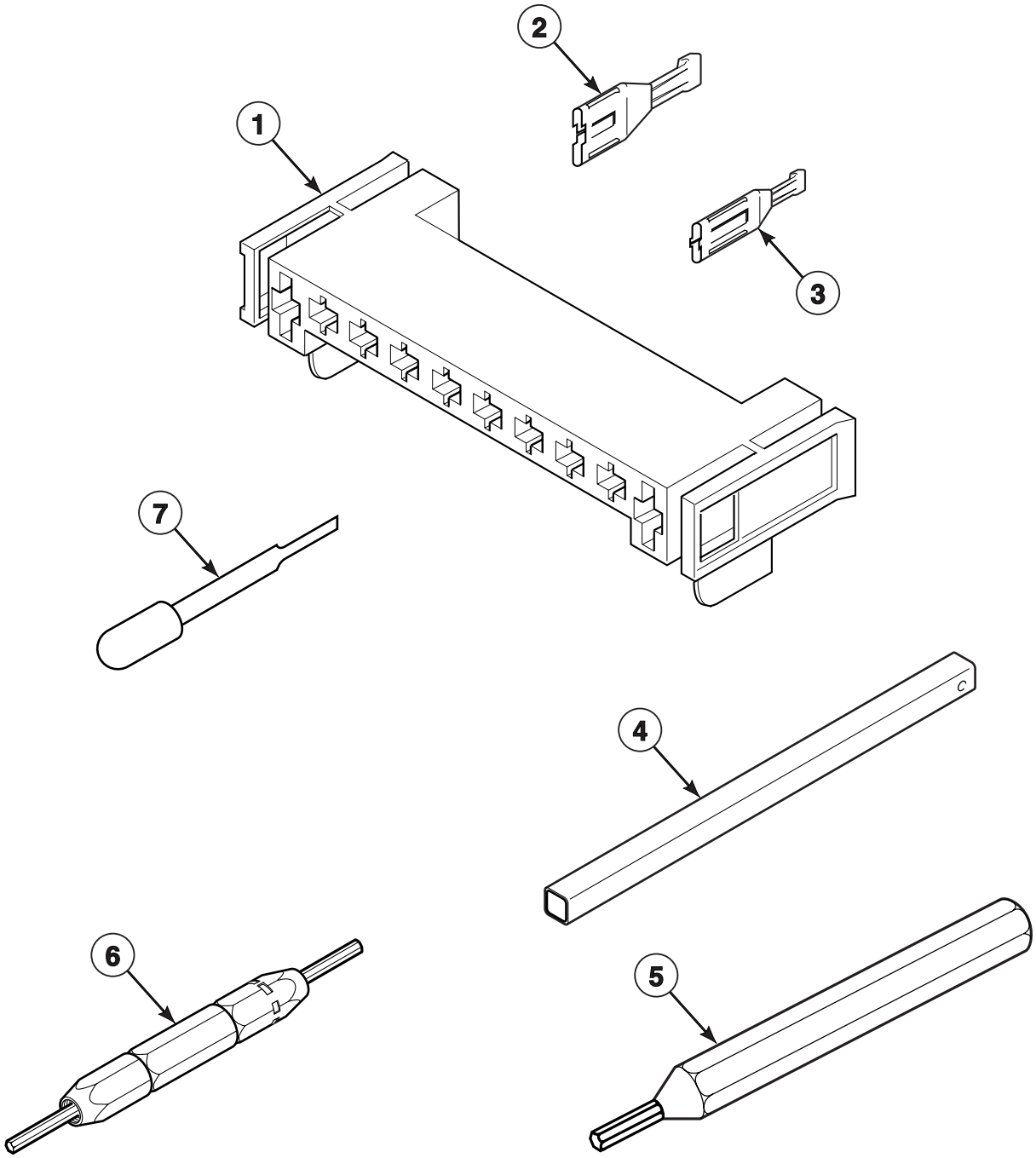

D319P_505678

© Copyright, Alliance Laundry Systems LLC – DO NOT COPY or TRANSMIT

Motor Connection Block, Terminal Extractor Tools

REF	PART NO.	DESCRIPTION	COMMENTS
1	500338	10 Position Housing	
2	00255	Female Terminal	1/4 inch; (1) 12 gauge wire
	00256	Female Terminal	1/4 inch; (1) or (2) 18 gauge wires
3	00188	Female Terminal	For 1 or 2 wire applications
4	310P4	Ratchet Extension Tool	1/4 inch; For coin drop installation
5	128P4	Extractor Tool	For use on gas dryer terminals
6	190P4	Extractor Tool	For use on electric dryer terminals
7	283P4	Terminal Extractor Tool	For use on molex connectors

© Copyright, Alliance Laundry Systems LLC – DO NOT COPY or TRANSMIT

Wire Harnesses and Wires

PART NO.	DESCRIPTION	COMMENTS
510414	Wire Harness Assembly	Models HFE107*A1702, HFE107*C1702 and SFE107*A
510419	Wire Harness Assembly	Models HFG109*A1102, HFG109*C1102 and SFG109*A
510534P	Harness Replacement Kit	Models HFE107*A1702, HFE107*C1702, HFG109*A1102, HFG109*C1102, SFE107*A and SFG109*A
45001	18 Gauge Wire	Black; Order by the foot; Order terminals and connectors as required
45380	12 Gauge Wire	Orange; Order by the foot; Order terminals and connectors as required

*** Add Letter To Designate Color. L - Almond W - White**

NOTE: Individual wires are not available separately. Order complete harness, or order wire by the foot. When applying terminals to wires, it is recommended that the terminals be soldered to the wires.

© Copyright, Alliance Laundry Systems LLC – DO NOT COPY or TRANSMIT

Parts Index

A

Access Panel
510069* 21
Access Panel Plate
510903 35
Accumulator Replacement Kit
510628P 17
Adhesive
511637 ..... 25, 27
Air Duct Assembly
510151 25

B

Bit Holder
24161 21
Blower Fan Assembly
510139 23
Blower Housing and Cover Kit
511969P 23
Blower Housing Seal
510238 23
Bolt
29651 11
Booster and Holding Coil
58804A 33
Burner Assembly
510149 33

C

Cabinet Top Kit
511529*P 11
Card Reader
39685 15
Card Reader Instruction Overlay
38192 15
Coin Drop
38479 7
Coin Meter Drive
M400754 17
Coin Slide Extension
503455 5
Coin Slide Guard
58181 5
Combustion Duct
510131 31
Connector, 2 Circuit
58799 41
Connector, 3 Circuit
58800 39
Control Kit
M414050P 7, 9
Control Panel and Bracket Assembly
504447* 5
505510* 7, 9
Cylinder Assembly
510265P 25
Cylinder Baffle
503703 25
Cylinder Belt
511255 23
Cylinder Glide
510187 25
Cylinder Glide Bracket
510145 25
Cylinder Roller
510708P 27
Cylinder Roller Bracket
510100 27
Cylinder Seal Assembly
510207P 25, 27

D

Disconnect Power Warning Label
505281 35
Door Catch Assembly
510177 21
Door Handle Wedge
510129 19
Door Hinge
511036 ..... 11, 19
Door Hinge Mounting Clip
500236 11
Door Pull and Wedge Kit
510103*P 19
Door Strike
510181 19
Door Strike Mount
510127 19
Door Switch Bracket
38087 13
Dryer Base
510084 35
Dryer Door
510013* 19

E

Elbow Shut-off Valve
510205 33
Electric Clearance Label
511005 35
Exhaust Duct
510137 35
Extractor Tool
128P4 43
190P4 43

N/A items do not appear in index.

© Copyright, Alliance Laundry Systems LLC – DO NOT COPY or TRANSMIT

F

Fabric Selector Switch
61512 5

Felt Pad
510189 25

Female Piggyback Terminal
00361 41

Female Pin Terminal
00117 39
00130 39

Female Spade Terminal
00114 41
00115 41
00121 41
00124 41
00156 41
00189 41
00209 41
00223 41

Female Tab Terminal
00344 41

Female Terminal
00188 43
00255 43
00256 43

Flag Insulated Terminal
00345 41

Front Assembly
505542* 9
511633* 7

Front Bulkhead Assembly
510266 25

Front Panel
510066* 21

Front Panel Seal
511056 21

Fuse Notice Label
61294 35

G

Gas Clearance Label
511004 ..... 21, 35

Gas Valve Assembly
60353 33

Gas Valve Mounting Bracket
510128 33

Gas Valve Wire Harness Assembly
510530 33

Grounding Clip
00161 41

H

Harness Replacement Kit
510534P 44

Harness Strap
55881 39

Heat Duct Shroud
510101 31

Heater
510325 29

Heater Assembly
510329 29

Heater Duct and Screw Assembly
510025P 29, 31

Housing, 10 Position
500338 43

I

Idler Lever
510133 23

Idler Lever and Wheel Assembly
510158 23

Idler Spring
510185 23

Idler Wheel and Bearing Assembly
510142 23

Igniter and Bracket Assembly
510184P 33

Instruction Overlay
504585 11

Insulated Female Terminal
00165 41

L

Lead-In Cord
59308 37

Lead-In Pipe Assembly
510204 33

Leveling Leg
510135 35

Light
32464 5

Limit Thermostat
510701 29
510702 31

Liner Door Seal
510147 19

Liner, Seal and Grill Assembly
510163WP 19

Lint Filter
503980 25

Lock Cam
27261 ..... 5, 7, 9

Lock Kit
27260P 5, 7, 9

L.P. Conversion Kit
458P3 33

M

Male Pin Terminal
00116 39
00127 39

Male Tab Terminal
00139 41

N/A items do not appear in index.

© Copyright, Alliance Laundry Systems LLC – DO NOT COPY or TRANSMIT

Motor and Pulley Assembly
511629P 23
Motor Hub Ring Kit
590P3 23
Motor Mount
510060 23
Motor Mount Clamp
510180 23
Motor Pulley
512196 23
Motor Switch Kit
501218P 23

N

Nut
24205 5
29786 7
29796 11
36020 11
52566 23
52947 5
56156 ..... 23, 27
80077 ..... 13, 15
N.G. Conversion Kit
459P3 33

O

Outlet Cover
500820 ..... 29, 31
Overlay
504210 5

P

Panel Kit
727P3* 35
Panel Locator
56079 ..... 11, 13, 15, 21, 35
Pawl Spring
53244 17
Plug
23040 39
Plug, 2 Circuit
56266 39
56448 39
Pop Rivet
685847 11
70058501 25
Pre-Insulated Spade Terminal
00215 41

R

Ratchet Extension Tool
310P4 43
Ratchet Wheel
53239 17
Rear Bulkhead Assembly
511082 27
Receptacle Housing
90789 41
Receptacle, 2 Circuit
56265 39
56451 39
Receptacle, 3 Circuit
23039 39
Retaining Ring
23748 ..... 23, 27
Ring Terminal
00110 41
00111 41

S

Screw
03203 11
03950 5
20530 ..... 9, 37
23008 11
23222 ..... 29, 33
31260 23
33561 23
33562 ..... 5, 21, 35
36048 11
39733 ..... 11, 13, 15, 21, 35
500226 ..... 11, 19, 25
500824 23
501285 ..... 25, 27
501524 ..... 7, 9
502431 ..... 13, 15
503661 ..... 11, 13, 15, 21, 23, 25, 27, 35
503688 ..... 13, 15, 27, 29, 31, 33, 35
505295 19
51782 ..... 31, 33
56124 33
61199 27
62588 25
62853 21
Secondary Coil
58804B 33
Security Cabinet Front Assembly
511523* 11
Sensor
510213 33
Shaft
56461 ..... 23, 27
Spade Terminal
00245 41
Strain Relief
38384 ..... 37, 41
52113 ..... 5, 7, 9
52151 ..... 5, 7, 9
Switch
504570 ..... 13, 21
Switch Assembly
55882 5
Switch Knob
39897 5

N/A items do not appear in index.

© Copyright, Alliance Laundry Systems LLC – DO NOT COPY or TRANSMIT

T

Terminal
00346 41
00347 41

Terminal Block Assembly
510190P 27

Terminal Block Shield
510237 27

Terminal Extractor Tool
283P4 43

Thermal Fuse Assembly
511412 29

Thermostat
504515 23

Timer Bracket
503017 11

Timer Motor
512017P 17

Timing Cam
53240 17
53241 17
53242 17
53243 17

Top Mounting Bracket
504228 11

Torx Bit
282P4 21

U

Ultra Pod Terminal
00359 41
00360 39

W

Warning/Caution Label
500281 21

Washer
25820 5
52549 ..... 23, 27
800457 11
91176 5

Wire Clip
504034 39

Wire Harness Assembly
510414 44
510419 44

Wire, 12 Gauge
45380 44

Wire, 18 Gauge
45001 44

Wrapper and Channel Assembly
505753* 5, 7, 9, 11

N/A items do not appear in index.

© Copyright, Alliance Laundry Systems LLC – DO NOT COPY or TRANSMIT